Deep Excavation

Introduction

There are two ways to model an excavation in COMSOL Multiphysics, both of which include a parametric sweep. One option involves removing the soil one step at a time by means of a a sweep of the geometry. As the soil is removed, the support it supplies is removed as well, subjecting the retaining wall to soil stresses from the non excavated side. The other option is to start with the already excavated geometry, and simulate the soil removal by modifying a boundary load. The boundary load applies a force on the excavation side of the retaining wall, equal to (and therefore balancing) the in-situ stresses on the non excavated side, for the part of the wall that is below the virtual excavation depth.

This deep excavation model is inspired by a benchmark exercise specified by a working group of the German Society for Geotechnics (Ref. 1 and Ref. 2). In the example, a 26 meter excavation is modeled by means of a parametric sweep. As the excavation deepens, three struts are activated using a ramp function and boolean expressions. As the excavation reaches their depths, the struts are activated as long as the horizontal wall deflection is greater than what is allowed to be.The interaction between the soil and the retaining wall is modeled with identity pairs.

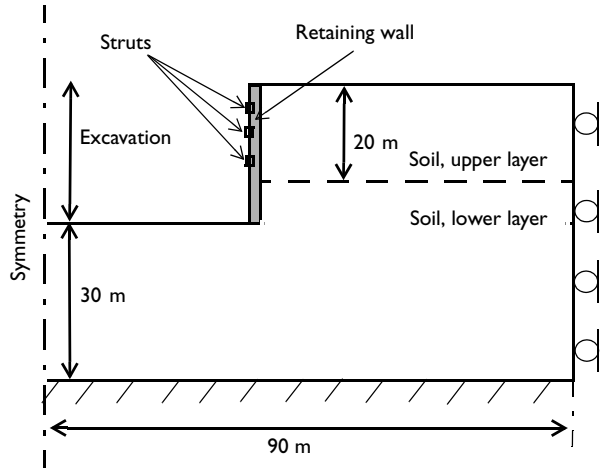

Figure 1: Dimensions and boundary conditions for the deep excavation model.

Model Definition

In this example, a Drucker-Prager criterion is used for studying the soil plasticity, and the retaining wall is made of a linear elastic material. The following material parameters are used:

SOIL, UPPER LAYER

- Young's modulus $E = 20$ MPa, Poisson's ratio $\nu = 0.3$, and density $\rho = 1900$ kg/m^3.
- Cohesion $c = 0$ Pa, and angle of internal friction $\phi = 35°$.

SOIL, LOWER LAYER

- Young's modulus $E = 60$ MPa, Poisson's ratio $\nu = 0.3$, and density $\rho = 1900$ kg/m^3.
- Cohesion $c = 0$ Pa, and angle of internal friction $\phi = 35°$.

STRUTS

- Young's modulus $E = 200$ GPa, length $l = 30$ m and cross sectional area $A = 15$ cm^2.

RETAINING WALL

- Young's modulus $E = 30$ GPa, Poisson's ratio $\nu = 0.15$, and density $\rho = 2400$ kg/m^3.

CONSTRAINTS AND LOADS

- The bottom soil layer is supported by a rigid and perfectly rough base. Apply therefore fixed constraint on the lower horizontal boundary.
- Due to symmetry, model only the right half of the domain. Use the symmetry boundary condition at the left vertical boundary.
- Add in-situ stresses with the **Initial Stress and Strain** feature. Note that the stress caused by gravity is compressive, which in the convention used in the Structural Mechanics Module means negative sign.
- The in-situ stresses account for the local stress prior excavating. You can define a different value in the vertical and horizontal directions. The horizontal in-situ stress, `X_stress`, is also used on the boundary load applied to the retaining wall.
- Add struts that can be activated and deactivated according to the excavation depth by means of boolean expressions.

 ©2013 COMSOL

- The struts are active after a maximum horizontal deflection is reached. Use a ramp function to restrict the allowed wall deflection `U_max` to 25 mm, and to supply the axial force that the struts apply to the wall.
- Add an identity pair for modeling of the contact between the soil and the retaining wall.

The boundary load on the retaining wall is gradually decreased in order to simulate the excavation steps. At the bottom of the excavation it ensures zero initial displacement. This strategy avoids re-meshing the excavated volume and thus saves memory.

The axial stiffness of the struts is estimated from their cross sectional area A, the length l, and the material Young's modulus E as

$$S = E\frac{A}{l}$$

The boundaries between the retaining wall and the soil are modeled with extrusion operators. These operators constrain the normal displacement between the retaining wall and the soil to stay in contact, while the tangential displacement is unconstrained.

Results and Discussion

In order to improve convergence on the soil-wall boundary, apply a mapped mesh on the retaining wall domain, as shown in Figure 2.

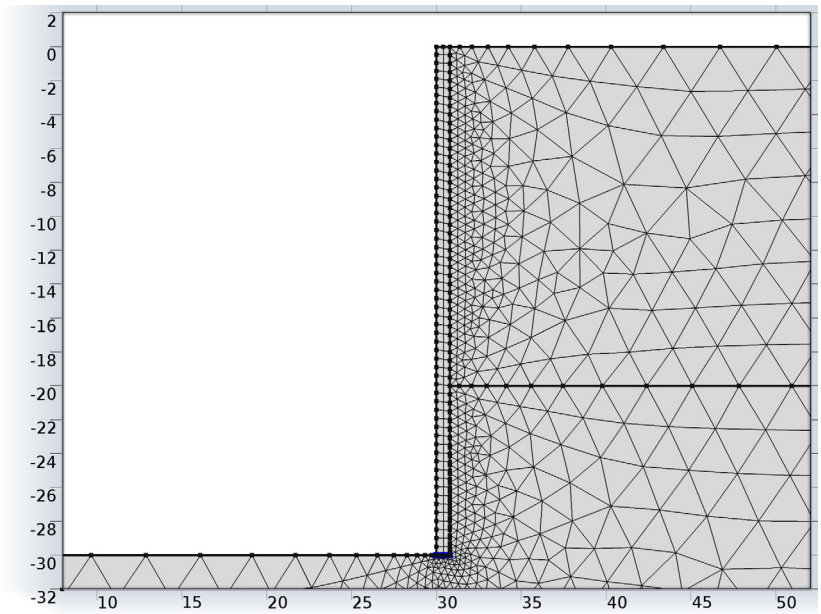

Figure 2: A mapped mesh on the retaining wall domain gives a better convergence.

Figure 3 shows the soil deformation and the wall deflection after excavating 26 meters. Figure 4 shows that the different properties of the two soil layers have an impact on the plastic deformation.

 ©2013 COMSOL

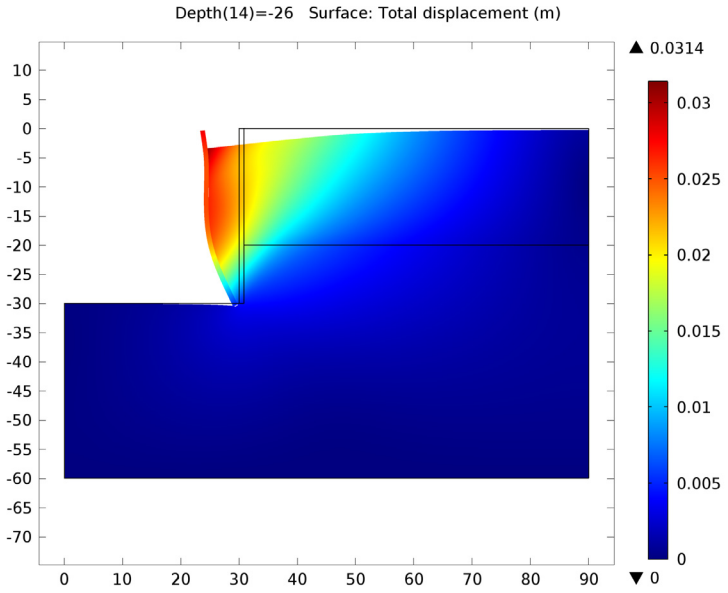

Figure 3: Deformation of the soil and the retaining wall after excavating 26 meters of soil.

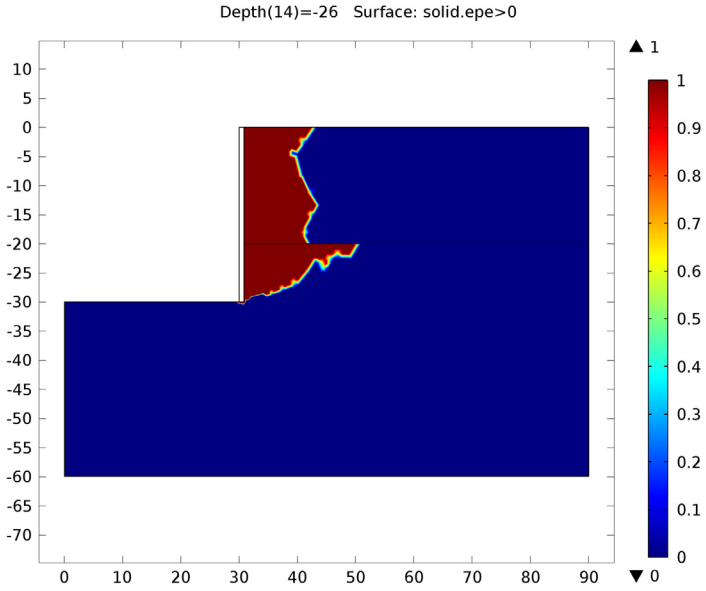

Figure 4: Plastic deformation after excavating 26 meters of soil.

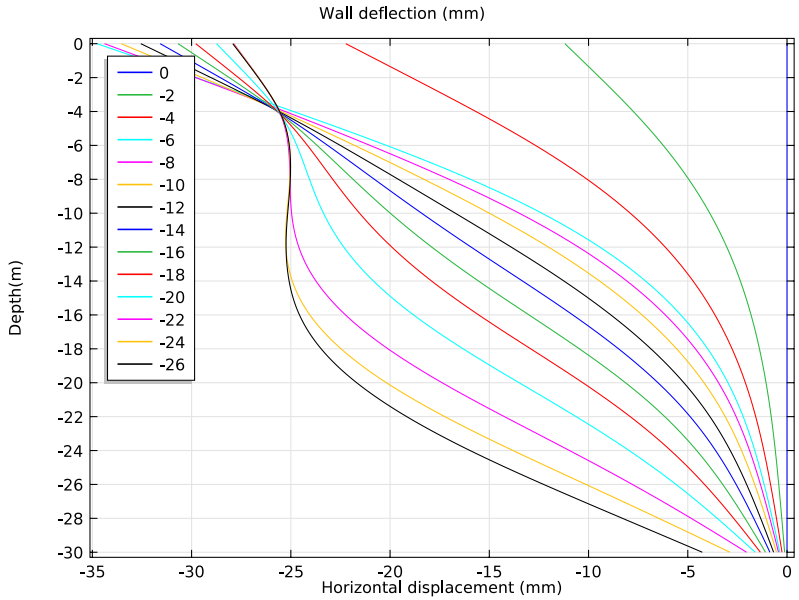

Figure 5: Wall deflection as a function of depth for different excavation steps (color lines).

The struts—placed 4.8 m, 9.3m and 14.35 meters below the initial surface (Ref. 1)—help to increase the overall stiffness of the retaining wall. In Figure 5, a maximum

 ©2013 COMSOL

allowed displacement of 2.5 cm constrains the horizontal displacement of the retaining wall.

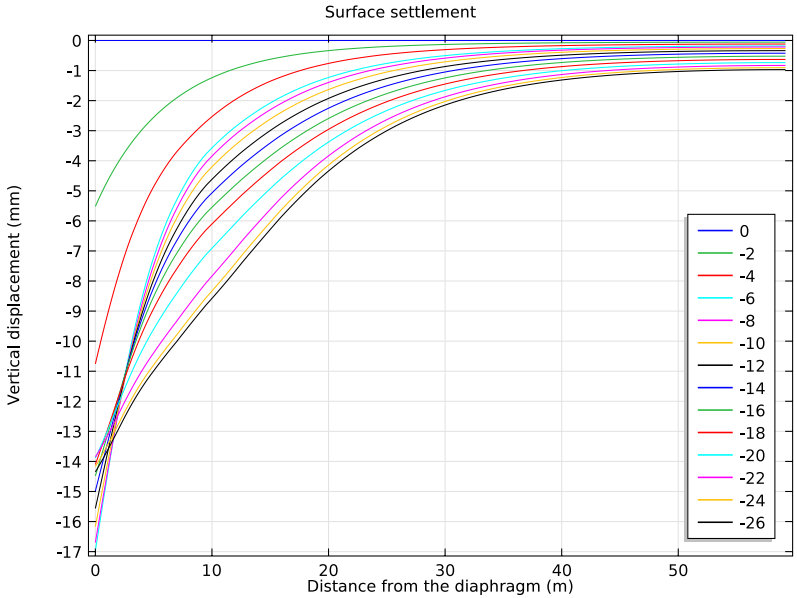

Figure 6: Surface settlement as a function of the distance from the wall. The different color lines show the settlement for different excavation stages (0 to 26 m).

As the excavation progresses, it is possible to observe the subsidence on the un-excavated region. As expected, the subsidence increases as the excavation progresses, and decreases with the distance to the retaining wall, see Figure 6.

References

1. H.F. Schweiger, "Benchmarking in Geotechnics 1. Technical Report CGG IR006 2002," Institute for Soil Mechanics and Foundation Engineering, Graz University of Technology, Austria.

2. D. Potts and L. Zdravkovic, *Finite Element Analysis in Geotechnical Engineering*, Thomas Telford Publishing, 2001.

Model Library path: `Geomechanics_Module/Soil_Models/deep_excavation`

Modeling Instructions

MODEL WIZARD

1 Go to the **Model Wizard** window.

2 Click the **2D** button.

3 Click **Next**.

4 In the **Add physics** tree, select **Structural Mechanics>Solid Mechanics (solid)**.

5 Click **Add Selected**.

6 Click **Next**.

7 Find the **Studies** subsection. In the tree, select **Preset Studies>Stationary**.

8 Click **Finish**.

GLOBAL DEFINITIONS

Parameters

1 In the **Model Builder** window, right-click **Global Definitions** and choose **Parameters**.

2 In the **Parameters** settings window, locate the **Parameters** section.

3 In the table, enter the following settings:

Name	Expression	Description
X_stress	-24e3[Pa]	in-situ stress, xx component
Y_stress	-35e3[Pa]	in-situ stress, yy component
Z_stress	-24e3[Pa]	in-situ stress, zz component
E_struts	2e5[MPa]	Young's modulus of struts
A_struts	15[cm^2]	Cross section area of struts
l_struts	30[m]	Length of struts
S_struts	E_struts*A_struts/ l_struts	Stiffness of struts
U_max	-25[mm]	Allowed wall deflection
Stage_1	-4.8[m]	First excavation step, first strut
Stage_2	-9.3[m]	Second excavation step, second strut
Stage_3	-14.35[m]	Third excavation step, third strut
Depth	0	Excavation depth (parameter)

In-situ stresses are set with negative sign to fit the structural mechanics convention. That convention assumes negative stresses in compression and positive in tension.

 ©2013 COMSOL

Ramp 1

1 Right-click **Global Definitions** and choose **Functions>Ramp**.

2 In the **Ramp** settings window, locate the **Parameters** section.

3 In the **Location** edit field, type `-U_max`.

4 In the **Slope** edit field, type `S_struts/U_max`.

5 Click to expand the **Smoothing** section. In the **Size of transition zone** edit field, type `0.0001`.

6 Select the **Smooth at start** check box.

GEOMETRY 1

In the **Model Builder** window, expand the **Geometry 1** node.

Rectangle 1

1 Right-click **Model 1>Geometry 1** and choose **Rectangle**.

2 In the **Rectangle** settings window, locate the **Size** section.

3 In the **Width** edit field, type `90`.

4 In the **Height** edit field, type `60`.

5 Locate the **Position** section. In the **y** edit field, type `-60`.

6 Click the **Build Selected** button.

Rectangle 2

1 In the **Model Builder** window, right-click **Geometry 1** and choose **Rectangle**.

2 In the **Rectangle** settings window, locate the **Size** section.

3 In the **Width** edit field, type `90`.

4 In the **Height** edit field, type `20`.

5 Locate the **Position** section. In the **y** edit field, type `-20`.

6 Click the **Build Selected** button.

Union 1

1 Right-click **Geometry 1** and choose **Boolean Operations>Union**.

2 Select the objects **r1** and **r2** only.

3 Click the **Build Selected** button.

Rectangle 3

1 Right-click **Geometry 1** and choose **Rectangle**.

2 In the **Rectangle** settings window, locate the **Size** section.

3 In the **Width** edit field, type `30`.

4 In the **Height** edit field, type `30`.

5 Locate the **Position** section. In the **y** edit field, type `-30`.

6 Click the **Build Selected** button.

Rectangle 4

1 Right-click **Geometry 1** and choose **Rectangle**.

2 In the **Rectangle** settings window, locate the **Size** section.

3 In the **Width** edit field, type `0.8`.

4 In the **Height** edit field, type `30`.

5 Locate the **Position** section. In the **x** edit field, type `30`.

6 In the **y** edit field, type `-30`.

7 Click the **Build Selected** button.

Difference 1

1 Right-click **Geometry 1** and choose **Boolean Operations>Difference**.

2 Select the object **uni1** only.

3 In the **Difference** settings window, locate the **Difference** section.

4 Under **Objects to subtract**, click **Activate Selection**.

5 Select the objects **r3** and **r4** only.

6 In the **Difference** settings window, locate the **Difference** section.

7 Select the **Keep input objects** check box.

8 Click the **Build Selected** button.

Delete Entities 1

1 Right-click **Geometry 1** and choose **Delete Entities**.

2 In the **Delete Entities** settings window, locate the **Entities or Objects to Delete** section.

3 From the **Geometric entity level** list, choose **Object**.

4 Under **Selection**, click **Clear Selection**.

5 Click the **Select Box** button on the Graphics toolbar.

6 Click in the **Graphics** window, press Ctrl+A to highlight all objects, and then right-click to confirm the selection.

7 Select the objects **uni1** and **r3** only.

8 Click the **Build Selected** button.

 ©2013 COMSOL

Bézier Polygon 1

1 Right-click **Geometry 1** and choose **Bézier Polygon**.

2 In the **Bézier Polygon** settings window, locate the **Polygon Segments** section.

3 Find the **Added segments** subsection. Click the **Add Linear** button.

4 Find the **Control points** subsection. In row **1**, set **x** to `30`.

5 In row **1**, set **y** to `Stage_1+1`.

6 In row **2**, set **x** to `30`.

7 In row **2**, set **y** to `Stage_1`.

8 Click the **Build Selected** button.

Bézier Polygon 2

1 Right-click **Geometry 1** and choose **Bézier Polygon**.

2 In the **Bézier Polygon** settings window, locate the **Polygon Segments** section.

3 Find the **Added segments** subsection. Click the **Add Linear** button.

4 Find the **Control points** subsection. In row **1**, set **x** to `30`.

5 In row **1**, set **y** to `Stage_2+1`.

6 In row **2**, set **x** to `30`.

7 In row **2**, set **y** to `Stage_2`.

8 Click the **Build Selected** button.

Bézier Polygon 3

1 Right-click **Geometry 1** and choose **Bézier Polygon**.

2 In the **Bézier Polygon** settings window, locate the **Polygon Segments** section.

3 Find the **Added segments** subsection. Click the **Add Linear** button.

4 Find the **Control points** subsection. In row **1**, set **x** to `30`.

5 In row **1**, set **y** to `Stage_3+1`.

6 In row **2**, set **x** to `30`.

7 In row **2**, set **y** to `Stage_3`.

8 Click the **Build Selected** button.

Union 2

1 Right-click **Geometry 1** and choose **Boolean Operations>Union**.

2 Select the objects **r4**, **b1**, **b2**, and **b3** only.

3 Click the **Build Selected** button.

Form Union

1 In the **Model Builder** window, under **Model 1>Geometry 1** click **Form Union**.

2 In the **Finalize** settings window, locate the **Finalize** section.

3 From the **Finalization method** list, choose **Form an assembly**.

4 Click the **Build Selected** button.

DEFINITIONS

Explicit 1

1 In the **Model Builder** window, under **Model 1** right-click **Definitions** and choose **Selections>Explicit**.

2 In the **Explicit** settings window, locate the **Input Entities** section.

3 From the **Geometric entity level** list, choose **Boundary**.

4 Select Boundary 20 only.

5 Right-click **Model 1>Definitions>Explicit 1** and choose **Rename**.

6 Go to the **Rename Explicit** dialog box and type `wall_diaphragm` in the **New name** edit field.

7 Click **OK**.

Explicit 2

1 Right-click **Definitions** and choose **Selections>Explicit**.

2 In the **Explicit** settings window, locate the **Input Entities** section.

3 From the **Geometric entity level** list, choose **Boundary**.

4 Select Boundaries 5 and 6 only.

5 Right-click **Model 1>Definitions>Explicit 2** and choose **Rename**.

6 Go to the **Rename Explicit** dialog box and type `wall_soil` in the **New name** edit field.

7 Click **OK**.

General Extrusion 1

1 Right-click **Definitions** and choose **Model Couplings>General Extrusion**.

2 In the **General Extrusion** settings window, locate the **Source Selection** section.

3 From the **Geometric entity level** list, choose **Boundary**.

4 Click **Paste Selection**.

5 Go to the **Paste Selection** dialog box.

6 In the **Selection** edit field, type `12`.

 ©2013 COMSOL

7 Click the **OK** button.

8 In the **General Extrusion** settings window, locate the **Source** section.

9 From the **Source frame** list, choose **Material (X, Y, Z)**.

10 Locate the **Destination Map** section. In the **x-expression** edit field, type X.

11 In the **y-expression** edit field, type Y.

General Extrusion 2

1 Right-click **Definitions** and choose **Model Couplings>General Extrusion**.

2 In the **General Extrusion** settings window, locate the **Source Selection** section.

3 From the **Geometric entity level** list, choose **Boundary**.

4 From the **Selection** list, choose **wall_diaphragm**.

5 Locate the **Source** section. From the **Source frame** list, choose **Material (X, Y, Z)**.

6 Locate the **Destination Map** section. In the **x-expression** edit field, type X.

7 In the **y-expression** edit field, type Y.

SOLID MECHANICS

Linear Elastic Material 1

In this model, expected displacements are small compared to the geometry. Click Force linear strains to use the small strain formulation.

1 In the **Model Builder** window, expand the **Solid Mechanics** node, then click **Linear Elastic Material 1**.

2 In the **Linear Elastic Material** settings window, locate the **Geometric Nonlinearity** section.

3 Select the **Force linear strains** check box.

Soil Plasticity 1

1 Right-click **Model 1>Solid Mechanics>Linear Elastic Material 1** and choose **Soil Plasticity**.

2 In the **Soil Plasticity** settings window, locate the **Soil Plasticity** section.

3 Select the **Match to Mohr-Coulomb criterion** check box.

4 Select Domains 1 and 2 only.

Initial Stress and Strain 1

1 Right-click **Linear Elastic Material 1** and choose **Initial Stress and Strain**.

2 In the **Initial Stress and Strain** settings window, locate the **Initial Stress and Strain** section.

3 In the $\mathbf{S}_0$ table, enter the following settings:

X_stress	0	0
0	Y_stress	0
0	0	Z_stress

Symmetry 1

1 In the **Model Builder** window, right-click **Solid Mechanics** and choose **Symmetry**.

2 Select Boundary 1 only.

Fixed Constraint 1

1 Right-click **Solid Mechanics** and choose **Fixed Constraint**.

2 Select Boundary 2 only.

Roller 1

1 Right-click **Solid Mechanics** and choose **Roller**.

2 Select Boundaries 9 and 10 only.

Prescribed Displacement 1

1 Right-click **Solid Mechanics** and choose **Prescribed Displacement**.

2 Select Boundary 4 only.

3 In the **Prescribed Displacement** settings window, locate the **Prescribed Displacement** section.

4 Select the **Prescribed in y direction** check box.

5 In the u_{0y} edit field, type `genext1(v)`.

Prescribed Displacement 2

1 Right-click **Solid Mechanics** and choose **Prescribed Displacement**.

2 In the **Prescribed Displacement** settings window, locate the **Boundary Selection** section.

3 From the **Selection** list, choose **wall_soil**.

4 Locate the **Prescribed Displacement** section. Select the **Prescribed in x direction** check box.

5 In the u_{0x} edit field, type `genext2(u)`.

 ©2013 COMSOL

Boundary Load 1

1 Right-click **Solid Mechanics** and choose **Boundary Load**.

2 Select Boundaries 3, 8, and 19 only.

3 In the **Boundary Load** settings window, locate the **Force** section.

4 In the $\mathbf{F}_A$ table, enter the following settings:

0	x
Y_stress	y

Boundary Load 2

1 Right-click **Solid Mechanics** and choose **Boundary Load**.

2 Click the **Select Box** button on the Graphics toolbar.

3 Select Boundaries 11 and 13–18 only.

4 In the **Boundary Load** settings window, locate the **Force** section.

5 In the $\mathbf{F}_A$ table, enter the following settings:

-X_stress*(y<Depth)	x
0	y

Boundary Load 3

1 Right-click **Solid Mechanics** and choose **Boundary Load**.

2 Select Boundary 17 only.

3 In the **Boundary Load** settings window, locate the **Force** section.

4 From the **Load type** list, choose **Total force**.

5 In the $\mathbf{F}_{tot}$ table, enter the following settings:

-rm1(-u[1/m])*(Depth<Stage_1)	x
0	y

6 Right-click **Model 1>Solid Mechanics>Boundary Load 3** and choose **Rename**.

7 Go to the **Rename Boundary Load** dialog box and type `Strut_1` in the **New name** edit field.

8 Click **OK**.

Boundary Load 4

1 Right-click **Solid Mechanics** and choose **Boundary Load**.

2 Select Boundary 15 only.

3 In the **Boundary Load** settings window, locate the **Force** section.

4 From the **Load type** list, choose **Total force**.

5 In the $\mathbf{F}_{\text{tot}}$ table, enter the following settings:

`-rm1(-u[1/m])*(Depth<Stage_2)`	x
0	y

6 Right-click **Model 1>Solid Mechanics>Boundary Load 4** and choose **Rename**.

7 Go to the **Rename Boundary Load** dialog box and type `Strut_2` in the **New name** edit field.

8 Click **OK**.

Boundary Load 5

1 Right-click **Solid Mechanics** and choose **Boundary Load**.

2 Select Boundary 13 only.

3 In the **Boundary Load** settings window, locate the **Force** section.

4 From the **Load type** list, choose **Total force**.

5 In the $\mathbf{F}_{\text{tot}}$ table, enter the following settings:

`-rm1(-u[1/m])*(Depth<Stage_3)`	x
0	y

6 Right-click **Model 1>Solid Mechanics>Boundary Load 5** and choose **Rename**.

7 Go to the **Rename Boundary Load** dialog box and type `Strut_3` in the **New name** edit field.

8 Click **OK**.

MATERIALS

Material 1

1 In the **Model Builder** window, under **Model 1** right-click **Materials** and choose **Material**.

2 Right-click **Material 1** and choose **Rename**.

3 Go to the **Rename Material** dialog box and type `Soil, upper layer` in the **New name** edit field.

4 Click **OK**.

5 In the **Material** settings window, locate the **Geometric Entity Selection** section.

6 From the **Selection** list, choose **Manual**.

 ©2013 COMSOL

7 Click **Clear Selection**.

8 Select Domain 2 only.

9 In the **Material** settings window, locate the **Material Contents** section.

10 In the table, enter the following settings:

Property	Name	Value
Young's modulus	E	`20e6`
Poisson's ratio	nu	`0.3`
Density	rho	`1900`
Cohesion	cohesion	0
Angle of internal friction	internalphi	`35[deg]`

Material 2

1 In the **Model Builder** window, right-click **Materials** and choose **Material**.

2 Right-click **Material 2** and choose **Rename**.

3 Go to the **Rename Material** dialog box and type `Soil, lower layer` in the **New name** edit field.

4 Click **OK**.

5 Select Domain 1 only.

6 In the **Material** settings window, locate the **Material Contents** section.

7 In the table, enter the following settings:

Property	Name	Value
Young's modulus	E	`60e6`
Poisson's ratio	nu	`0.3`
Density	rho	`1900`
Cohesion	cohesion	0
Angle of internal friction	internalphi	`35[deg]`

Material 3

1 In the **Model Builder** window, right-click **Materials** and choose **Material**.

2 Right-click **Material 3** and choose **Rename**.

3 Go to the **Rename Material** dialog box and type `retaining wall` in the **New name** edit field.

4 Click **OK**.

5 Select Domain 3 only.

6 In the **Material** settings window, locate the **Material Contents** section.

7 In the table, enter the following settings:

Property	Name	Value
Young's modulus	E	30e9
Poisson's ratio	nu	0.15
Density	rho	2400

MESH 1

1 In the **Model Builder** window, under **Model 1** right-click **Mesh 1** and choose **Mapped**.

Use a mapped mesh inside the wall.

Mapped 1

1 In the **Mapped** settings window, locate the **Domain Selection** section.

2 From the **Geometric entity level** list, choose **Domain**.

3 Select Domain 3 only.

Distribution 1

1 Right-click **Model 1>Mesh 1>Mapped 1** and choose **Distribution**.

2 In the **Distribution** settings window, locate the **Boundary Selection** section.

3 From the **Selection** list, choose **wall_diaphragm**.

4 Locate the **Distribution** section. In the **Number of elements** edit field, type 60.

Distribution 2

1 Right-click **Mapped 1** and choose **Distribution**.

2 In the **Distribution** settings window, locate the **Boundary Selection** section.

3 Click **Paste Selection**.

4 Go to the **Paste Selection** dialog box.

5 In the **Selection** edit field, type 12.

6 Click the **OK** button.

7 In the **Distribution** settings window, locate the **Distribution** section.

8 In the **Number of elements** edit field, type 2.

Free Triangular 1

In the **Model Builder** window, right-click **Mesh 1** and choose **Free Triangular**.

 ©2013 COMSOL

Size 1

1 In the **Model Builder** window, under **Model 1>Mesh 1** right-click **Free Triangular 1** and choose **Size**.

2 In the **Size** settings window, locate the **Element Size** section.

3 From the **Predefined** list, choose **Finer**.

Distribution 1

1 Right-click **Free Triangular 1** and choose **Distribution**.

2 Select Boundary 6 only.

3 In the **Distribution** settings window, locate the **Distribution** section.

4 In the **Number of elements** edit field, type 40.

Distribution 2

1 Right-click **Free Triangular 1** and choose **Distribution**.

2 Select Boundary 5 only.

3 In the **Distribution** settings window, locate the **Distribution** section.

4 In the **Number of elements** edit field, type 20.

Distribution 3

1 Right-click **Free Triangular 1** and choose **Distribution**.

2 Select Boundary 4 only.

3 In the **Distribution** settings window, locate the **Distribution** section.

4 In the **Number of elements** edit field, type 3.

5 Click the **Build All** button.

Click the Zoom Box button on the Graphics toolbar and then use the mouse to zoom in on the contact zone where the mesh is the densest.

MESH 1

The mesh should look like that in Figure 2.

STUDY 1

Step 1: Stationary

1 In the **Model Builder** window, under **Study 1** click **Step 1: Stationary**.

2 In the **Stationary** settings window, click to expand the **Study Extensions** section.

3 Select the **Continuation** check box.

4 Click **Add**.

5 In the table, enter the following settings:

Continuation parameter	Parameter value list
Depth	`range(0,-2,-26)`

Solver 1

1 In the **Model Builder** window, right-click **Study 1** and choose **Show Default Solver**.

2 Expand the **Solver 1** node.

3 In the **Model Builder** window, expand the **Study 1>Solver Configurations>Solver 1>Stationary Solver 1** node, then click **Parametric 1**.

4 In the **Parametric** settings window, locate the **General** section.

5 From the **Predictor** list, choose **Constant**.

Restrict the step size to 0.5 to better capture the development of plasticity.

6 Click to expand the **Tuning** section. Select the **Tuning of step size** check box.

7 In the **Initial step size** edit field, type `0.5`.

8 In the **Maximum step size** edit field, type `0.5`.

9 In the **Model Builder** window, right-click **Study 1** and choose **Compute**.

RESULTS

Stress (solid)

The default plot shows the von Mises stress for the last value of the parameter. Modify and rename this plot group to display the displacement.

1 In the **Model Builder** window, under **Results** right-click **Stress (solid)** and choose **Rename**.

2 Go to the **Rename 2D Plot Group** dialog box and type `Displacement` in the **New name** edit field.

3 Click **OK**.

Displacement

1 In the **Model Builder** window, expand the **Results>Displacement** node, then click **Surface 1**.

2 In the **Surface** settings window, click **Replace Expression** in the upper-right corner of the **Expression** section. From the menu, choose **Solid Mechanics>Displacement>Total displacement (solid.disp)**.

3 Click the **Plot** button.

 ©2013 COMSOL

4 Click the **Zoom Extents** button on the Graphics toolbar.

2D Plot Group 2

1 In the **Model Builder** window, right-click **Results** and choose **2D Plot Group**.

2 Right-click **2D Plot Group 2** and choose **Surface**.

3 In the **Surface** settings window, locate the **Expression** section.

4 In the **Expression** edit field, type `solid.epe>0`.

5 Click the **Plot** button.

6 Click the **Zoom Extents** button on the Graphics toolbar.

1D Plot Group 3

1 In the **Model Builder** window, right-click **Results** and choose **1D Plot Group**.

2 In the **1D Plot Group** settings window, locate the **Title** section.

3 From the **Title type** list, choose **Manual**.

4 In the **Title** text area, type `Wall deflection (mm)`.

5 Locate the **Plot Settings** section. Select the **x-axis label** check box.

6 In the associated edit field, type `Horizontal displacement (mm)`.

7 Select the **y-axis label** check box.

8 In the associated edit field, type `Depth(m)`.

9 Click to expand the **Legend** section. From the **Position** list, choose **Upper left**.

10 Right-click **Results>1D Plot Group 3** and choose **Line Graph**.

11 In the **Line Graph** settings window, locate the **Selection** section.

12 From the **Selection** list, choose **wall_diaphragm**.

13 Locate the **y-Axis Data** section. In the **Expression** edit field, type `y`.

14 Locate the **x-Axis Data** section. From the **Parameter** list, choose **Expression**.

15 In the **Expression** edit field, type `u`.

16 From the **Unit** list, choose **mm**.

17 Click to expand the **Legends** section. Select the **Show legends** check box.

18 Click the **Plot** button.

19 Click the **Zoom Extents** button on the Graphics toolbar.

1D Plot Group 4

1 In the **Model Builder** window, right-click **Results** and choose **1D Plot Group**.

2 In the **1D Plot Group** settings window, locate the **Title** section.

3 From the **Title type** list, choose **Manual**.

4 In the **Title** text area, type `Surface settlement`.

5 Locate the **Plot Settings** section. Select the **x-axis label** check box.

6 In the associated edit field, type `Distance from the diaphragm (m)`.

7 Select the **y-axis label** check box.

8 In the associated edit field, type `Vertical displacement (mm)`.

9 Locate the **Legend** section. From the **Position** list, choose **Lower right**.

10 Right-click **Results>1D Plot Group 4** and choose **Line Graph**.

11 Select Boundary 8 only.

12 In the **Line Graph** settings window, locate the **y-Axis Data** section.

13 In the **Expression** edit field, type `v`.

14 From the **Unit** list, choose **mm**.

15 Click to expand the **Legends** section. Select the **Show legends** check box.

16 Click the **Plot** button.

17 Click the **Zoom Extents** button on the Graphics toolbar.

 ©2013 COMSOL